LOW LOAD POSITIONING EQUIPMENT (LLPE) POSITIONER WITH CENTER HOLE LLP-150H

Instruction & Service Manual
(MNL-5420-06-1)

IMPORTER'S LIABILITY

The aim of this document is to briefly inform about the responsibilities of anyone putting onto the European market welding equipment, consumable material and welding accessories subject to the CE mark.

A keen attention has to be drawn on some duties – often underestimated or unknown – which are to be borne by anyone importing from extra European Countries such goods to be then put onto the market either by using his own brand name or with the one of the Extra-European Manufacturer.

Not everybody is aware that the importer of such goods becomes the only liable party against any European law infringement, thus bearing exactly the same duties which are usually responsibility of those manufacturing such items in Europe.

Therefore the importer, being the liable party for the product, will have the precise duty of granting the full compliance with the CE mark of the product put onto the European market.

Practically an importer - after identifying any enforceable Directives and the necessary requirements which the imported product once in the market must comply with - must check their compliance according to the conditions specified in the Directives and he must also grant such conformity with the additional duty of keeping a documentary evidence of the analysis.

As a consequence the importer shall have to prepare a "Technical File" with all the necessary information to prove the product compliance with the applicable basic requirements and keep such analysis in the technical documentation which must be made available of the "Competent Surveillance Authority" for 10 years after the date of last input of the product onto the market.

(Particularly concerning arc welding machines we remind you that the Technical File must prove all the tests required by EN60974 standards, including the electromagnetic compatibility, harmonics, flicker, etc.)

ROMAR POSITIONING EQUIPMENT INTERNATIONAL PTE LTD
18 TUAS CRESCENT SINGAPORE 638712
TEL: 6861 0928, 6861 3978
FAX: 6861 3363

CERTIFICATE OF CONFORMITY
EC Declaration of Conformity for Machinery
Machinery Directive (2006/42/EC)
Low Voltage Directive (2006/95/EC)
EMC Directive (2004/108/EC)

Machine Description: **Low Load Positioner**

Model: LLP Series

Supplied by: **Romar Positioning Equipment International Pte. Ltd.**

It is hereby declared that the named products supplied:

- Conform to the specifications and regulations of the Machinery Directive (2006/42/EC).
- Conform to the directive on electrical material for use within specific voltage limits (Low Voltage Directive (2006/95/EC)
- Conform to the directive on electromagnetic compatibility (EMC Directive 2004/108/EC)

The following (sections of) harmonized standard applies:

EN 12100-1	Machinery safety - Basic terms - General design principles - Part 1: Basic terminology, methodology.
EN 12100-2	Machinery safety - Basic terms - General design principles - Part 2: Technical principles and specifications.
EN 1050	Risk Assessment for Machinery
EN 13857	Safety of machinery -- Safety distances to prevent hazard zones being reached by upper and lower limbs
EN 60204-I: 2005	Safety of Machinery – Electrical Equipment of Machines - Part 1: General Requirements for Electrical Equipment on Machines

Name: Jesper Kilander
Designation: Managing Director

ROMAR POSITIONING EQUIPMENT INTERNATIONAL PTE LTD
18 TUAS CRESCENT SINGAPORE 638712
TEL: 6861 0928, 6861 3978
FAX: 6861 3363

CERTIFICATE OF CONFORMITY
EC Declaration of Conformity for Machinery
Machinery Directive (2006/42/EC)
Low Voltage Directive (2006/95/EC)
EMC Directive (2004/108/EC)

Machine Description: **Low Load Positioner**

Model: LLP Series

Supplied by: **Romar Positioning Equipment International Pte. Ltd.**

It is hereby declared that the named products supplied:

- Conform to the specifications and regulations of the Machinery Directive (2006/42/EC).
- Conform to the directive on electrical material for use within specific voltage limits (Low Voltage Directive (2006/95/EC)
- Conform to the directive on electromagnetic compatibility (EMC Directive 2004/108/EC)

The following (sections of) harmonized standard applies:

EN 12100-1	Machinery safety - Basic terms - General design principles - Part 1: Basic terminology, methodology.
EN 12100-2	Machinery safety - Basic terms - General design principles - Part 2: Technical principles and specifications.
EN 1050	Risk Assessment for Machinery
EN 13857	Safety of machinery -- Safety distances to prevent hazard zones being reached by upper and lower limbs
EN 60204-I: 2005	Safety of Machinery – Electrical Equipment of Machines - Part 1: General Requirements for Electrical Equipment on Machines

The machinery must not be put into service until the machinery into which it is to be incorporated has been declared in conformity with the provisions of the Directive.

Name: Jesper Kilander
Designation: Managing Director

INDEX OF INSTRUCTION MANUAL

1. SAFETY FUNCTIONS 1

2. INTRODUCTION 2
2.1 General 2
2.2 Positioner LLP Series Technical Specifications 3
2.3 Machine Plate 4
2.4 Warning Infromation Sticker 5

3. INSTALLATION 6
3.1 Handling and Storage of the Machine 6

4. STARTING-UP INSTRUCTIONS 7
4.1 Safety Consideration 7
4.2 Daily Checks 7

5. OPERATION INSTRUCTIONS 8
5.1 Loading the Positioner 8
5.2 Control Devices 9
5.2.1 Control Panel 9

INDEX OF SERVICE MANUAL

1. SERVICE AND MAINTENANCE 1
1.1 Service, Checking and Cleaning Procedures 1
1.2 Lubrication Instructions 2
1.2.1 Lubrication Instructions for Accessories 2

2. PARTS LIST 3
2.1 GA Drawing 3
2.2 Electrical Diagrams 4
2.3 Mechanical Part List 5

WARNING

Arc welding and cutting can be injurious to yourself and others. Take precautions when welding. Ask for your employer's safety practices which should be based on manufacturer's hazard data.

ELECTRIC SHOCK can kill.

- Install and earth the welding unit in accordance with applicable standards.
- Do not touch live electrical parts or electrodes with bare skin, wet gloves or wet clothing.
- Insulate yourself from earth and the work piece.
- Ensure your working stance is safe.

FUMES AND GASES can be dangerous to health.

- Keep your head out of the fumes.
- Use ventilation, extraction at the arc, or both, to keep fumes and gases from your breathing zone and the general area.

ARC RAYS can injure eyes and burn skin.

- Protect your eyes and body. Use the correct welding screen and filter lens and wear protective clothing.
- Protect bystanders with suitable screens or curtains.

FIRE HAZARD

- Sparks (spatter) can cause fire. Make sure therefore that there are no inflammable materials nearby.

NOISE can damage hearing.

- Protect your ears. Use earmuffs or other hearing protection.
- Warn bystanders of the risk.

MALFUNCTION

- Call for expert assistance in the event of malfunction.

READ AND UNDERSTAND THE INSTRUCTION & SERVICE MANUAL BEFORE INSTALLING AND OPERATING.

PROTECT YOURSELF AND OTHERS!

INSTRUCTION MANUAL

1. SAFETY FUNCTIONS

Users of handling equipment have ultimate responsibility for ensuring that anyone who works with or near the equipment observes all the relevant safety precautions.

The following recommendations should be observed in addition to the standard regulations that apply to the work place.

All work must be carried out by trained personnel who are familiar with the operation of the LLP positioner. Incorrect operation of the equipment may lead to a hazardous situation which can result in injury to the operator and damage to the equipment.

Staying under the workpiece during the working cycle is absolutely forbidden! Staying on top of the workpiece during the working cycle is forbidden without the safety equipment!

1. Anyone who uses the LLP Positioner must be familiar with
   - its operation
   - the location of the emergency stop
   - its function
   - relevant safety precautions

   To make this easier each switch, pushbutton or potentiometer is marked with a symbol that indicates its function when activated.

2. The operator must ensure that
   - no unauthorized person is stationed within the working area of the machine when it is started up
   - no-one is unprotected when the arc is struck

3. The work place must
   - be suitable for the purpose
   - be free from loose objects
   - be clean, because dust and welding flux can make the frictional force of the roller

4. Personal safety equipment
   - always wear recommended personal safety equipment, such as safety glasses, flame-proof clothing, safety gloves
   - do not wear loose-fitting items, such as scarves, bracelets, rings etc., which could become trapped or cause burns

5. General precautions
   - make sure the welding return cable is connected securely to the workpiece.
   - work on high voltage equipment may only be carried out by a qualified electrician
   - appropriate fire extinguishing equipment must be clearly marked and close at hand
   - lubrication and maintenance must not be carried out on the equipment during its operation; follow the lubrication instructions
   - check the tightness of the hydraulics, repair all possible leaks immediately. In other problem cases please contact to the producer or his representative
   - these products should not be lubricated or serviced during operation.

NOTE! *THE FUNCTION IS PHASE SENSITIVE!*

CONDUCT DAILY INSPECT ON DEVICE BEFORE START.

WARNING INSTRUCTION ON OPERATOR'S MANUAL TO REMIND OPERATOR DURING OPERATION.

2. INTRODUCTION

2.1 General

LLP positioners are a basic solution for the positioning of a lightweight workpieces. They occupy little space and feature quick and easy to operate.

All models meet or exceed the EN occupational safety requirements.

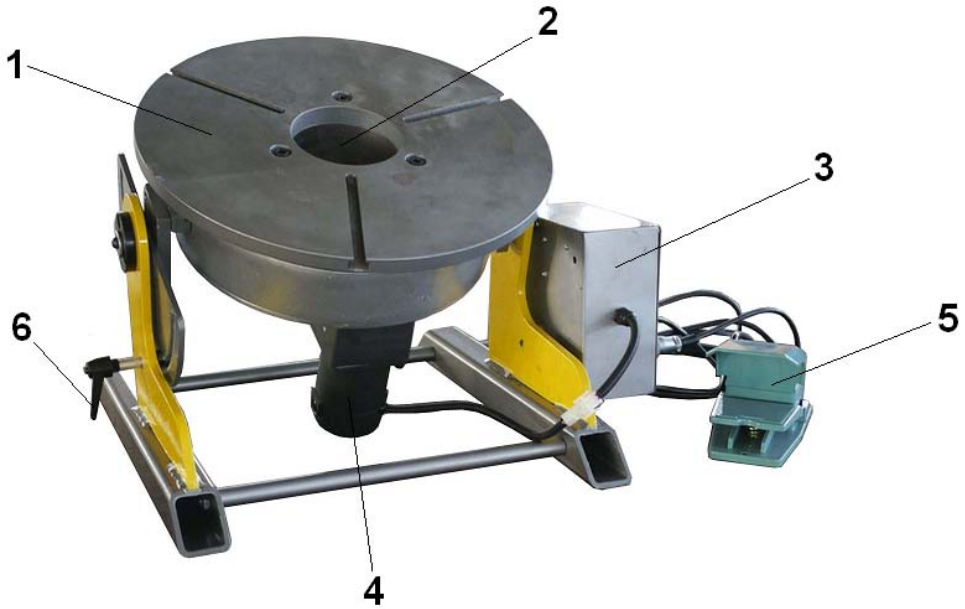

1. Machine Table Plate
2. Centre Hole
3. Electrical Cabinet
4. Motor
5. Foot Pedal
6. Lock Device

2.2 LLP Positioner Series Technical Specifications

LLP Model**

Model		**LLP-150H**
Capacity (Turning)		0.15MT at 100mm
Capacity (Tilting)		0.15MT at 100mm
Rotation Speed	RPM	0 to 4.5
Tilting Range	Degree	±90°
Power Supply		220V-1P-50Hz
Control Voltage	VAC	24
Rotation Drive Motor		90VDC, DC65W
Earthing	Amp	450
Table Plate Diameter	mm	450
Table Hole Diameter	mm	120
Weight	kg	63
Max Tilting Height	mm	510
Dimensions LxHxW	mm	574/417/530
Cable Foot Pedal	m	3

* Technical Specification as accurate from **(24.11.2011 Update)**.

2.3 Machine Plate

Machine plate is attached to the control cabinet.

It has important information:

Product Name	Equipment Name
Model	The type of machine
Part.No.	The ESAB article number for the machine
Capacity	The capacity of machine
Serial No.	The serial number of machine
MFG Date	The manufacturing year of the machine.
Voltage/Ampere/HZ/IP	Voltage Supply Requirement
Weight	The weight of the machine.

NOTE! *THE WEIGHT IS WITHOUT ACCESSORIES!*

The machine plate has electrical information:

Hz	Mains supply connection Hz
V	Mains supply connection V
KW	Mains supply connection KW

NOTE! *WHEN ORDERING SPARE PARTS, PLEASE STATE ALL THE INFORMATION IN MACHINE PLATE!*

* Note: For Machine Plate, Above Address are **NO LONGER** use since 15.06.2012, Please refer back page of manual for our new Address.

2.4 Warning Information Stickers

S/N	Information Text	Picture of sticker
1	**General Warnings** a] electric shock warning b] moving parts warning c] falling equipment warning	
2	DO NOT OVERLOAD! CHECK CAPACITY ON DATAPLATE!	

*Sticker Information as accurate from **(11.11.2011 Update)**.

3. INSTALLATION

IMPORTANT! *READ ALL RELEVANT MANUALS AND SAFETY PRECAUTIONS CAREFULLY BEFORE STARTING TO UNPACK AND INSTALL THE EQUIPMENT!*

PLEASE CHECK ALL OIL AND GREASE BEFORE OPERATING EQUIPMENT!

NOTE! *MAKE SURE INSTALLATION IS CARRIED OUT BY SUITABLY TRAINED PERSONNEL.*

- Inspect the machine to ensure that the Positioner is supplied with Push Button pendant station, and that they are not damaged during transit. There are no loose items supplied with this Equipment.
- Use a 4-legged lifting sling on the lifting lugs of the Positioner to move to desired installation location.
- Connect Power Cable (by others) to an appropriate 3-Phase Isolator following the required Amperes based on the table above. (Incoming Power: check data plate on Main Panel.)
- Ensure that there is no obstruction along the rotating or tilting path.
- Machine is ready for power “ON”.
- Ensure that the Table is tilted to zero degree, check from the Angle-Graduation Plate.
- Use an optical leveler and take a reading on a selected point on the outer edge of the Table Top.
- Rotate the Table for 90° and check the level of the same spot.
- Continue to check the level of the same spot at 180° and 270°.
- Adjust the level of leg-pad, if necessary by using the level adjustment screw.
- Lock the adjustment screw via the upper lock-nut and perform a final level check.
- Grout the Leg-pad using non-shrink epoxy grout.
- Allow appropriate time for curing and Positioner is ready for use.

3.1 Handling and Storage of the Machine

The machines are packed on a base, suitable for lifting by crane and/or forklift. Lift the machine from the lifting points (lifting loops) only.

Unload the machine from the packing and check the outer condition. Do not store the machine outside or in damp places.

NOTE! *CHECK THE MACHINE WEIGHT FROM THE TECHNICAL DATA. BE CAREFUL AND OBSERVE THE GENERAL LIFTING INSTRUCTIONS.*

4. STARTING-UP INSTRUCTIONS

4.1 Safety Consideration

- This machine is to be operated by authorized and trained operator only.
- Do not attempt to service the machine in the event of breakdown. Contact your Service/Maintenance Department.
- Do not wear loose clothing, as there are moving parts.
- Safety practices on electrical hazards must be observed such as no wet hands, clothing and properly insulated shoe.
- Always keep a copy of the Manual in the Electrical Panel.

4.2 Daily Checks

- Ensure that the work piece which was leftover from the previous shift is still securely fastened on the Table Top.
- Check that the Emergency button is functioning.
- Check that up/down tilting Limit Switches are functioning.

NOTE! *PLUG FITS ONLY IN ONE POSITION.*

DO NOT CONNECT THE WELDING RETURN CABLE THROUGH THE FRAME OF THE ROLLER BED – THE BEARINGS AND THE CONTROL MAY BE DAMAGED.

5. OPERATION INSTRUCTIONS

ESAB LLP positioners are designed to facilitate the manual and mechanized welding. All models meet or exceed the EN occupational safety requirements. With the positioner, the workpiece is always turned to the most favourable position. If you intend to use the positioner for any other purpose, please confirm suitability from the manufacturer or his representative.

5.1 Loading and Unloading of the Workpiece

- Use the table plate holes and T-slots for fastening the workpiece (Figure A).
- Check that the fastening of the workpiece is permanent during all the working time. Check regularly the fastening!
- Check that the earth terminal of the welding machine is connected to the positioner's own earth connector (Figure B).

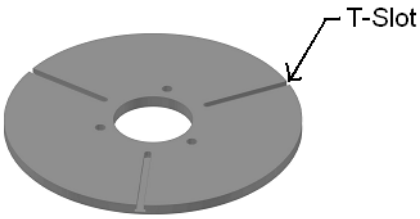

Figure A

Figure B

5.2 Control Devices

5.2.1 Control Panel

1. Power On Light
2. Speed Setting
3. Emergency Stop
4. On/Off Switch
5. Remote/Foot Switch
6. Forward/Reverse Switch
7. Foot Switch Plug
8. Power Plug

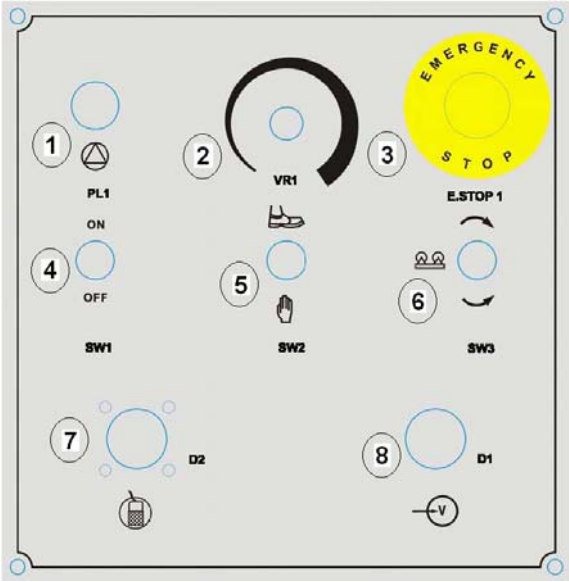

SERVICE MANUAL

1. SERVICE AND MAINTENANCE

1.1 Service, checking and cleaning procedures

Troubleshooting & Remedial

PROBLEM	REASON	ACTION
No Turning	1. Table Top bolts broken 2. Broken Bearing 3. Broken Motor Cable 4. Broken Gearbox/Motor 5. Defective Controller Card 6. Defective Control System 7. No Incoming Supply	1. Replace 2. Replace 3. Replace cable 4. Replace spare gear/motor 5. Replace controller card 6. Check for loose cabling/parts 7. Turn on isolator and release E-Stop
Loose Table Top	1. Table Top bolts loose 2. Broken Bearing 3. Worn output shaft	1. Tighten 2. Replace 3. Replace
Vibration in Turning	1. Bearing Assembly damage 2. Bearing Housing Seizure 3. Worn output shaft 4. Damaged motor or gearbox 5. Control system intermittent	1. Change 2. Lubricate via nipple 3. Change 4. Replace motor/spare gear 5. Change cable
Difficulty in Welding	1. Defective Rotary Earth 2. Copper Strip Loosen 3. Earth cable damaged	1. Replace 2. Tighten 3. Change

Checking and cleaning procedures

CHECKING AREA	CHECKING POINT	DESCRIPTION	DAILY	EVERY 6 MONTHS	FUNCTIONS
General	Working area	Working area must be suitable for work	X		Visual checking
	Whole machine	Abnormal vibration, noise and heating	X		Visual checking (make immediately all the needed repairs)
		General condition of machine	X		Visual checking
Mechanical	Fastening bolts	Fastening bolts have to be tight		X	Tight all fastening bolts
	Cover and safety equipment	Must be in their places and in proper condition	X		Visual checking (make immediately all the needed repairs)
	Transmission mechanism	Checking of the gear oil		X	Add oil or change it according to lubrication instructions
Electrical	Electric cabin	Electric cabin has to be clean		X	Vacuum the cabin
	Connections	Screw and plug tight and in good condition		X	Tight and check all connections
		Cable must be unbroken	X		Visual checking (change when needed)
	Remote control	Emergency stop button has to be unbroken	X		Check the function
		Function		X	Check all the functions and repair when needed
	Cables and sensors	Cables and sensors must be unbroken		X	Visual checking (broken cables and sensors must be changed immediately)
	Components	Check relays, contactors and fuses		X	Visual checking (check tips and change when needed)

NOTE! *IN CASE OF HEAVY USE, THE CHECKING HAS TO BE DONE ONCE A MONTH!*

1.2 Lubrication Instructions

1.2.1 Lubrication Instructions for Accessories

S/N	Component		Inspection & Action	Lubricant & Detergent Code	Qty	Duration of Operation
1	Gear Train		See Note 1	Shell EP Grease 1128	N.A.	As required
2	Grease Nipple		See Note 2	Shell EP Grease 1128	N.A.	Every 3 months
3	Gearbox	Primary	Oil Change	Refer to table 1.2.2	0.025 L	As necessary, 2000 hours or 18 months

Notes:
1. Use white spirit to clean Gear Train during replacement of Grease
2. All Grease Nipples to be charged every 3 months

Temperature (°C)	ISO VG	Mobil	Shell
-30 ~ -15	VG 150	Mobilgear 629	Omala 150
-15 ~ -3	VG 220	Mobilgear 630	Omala 220
-3 ~ 23	VG 320	Mobilgear 632	Omala 320
23 ~ 40	VG 460	Mobilgear 634	Omala 460
40 ~ 80	VG 680	Mobilgear 636	Omala 680

Table 1.2.2

2. PARTS LIST

2.1 The General Arrangement is a CAD module illustrating the general set-up of the equipment. The main specifications of the equipment are also listed in the GA. The General Arrangement for the LLP Positioner Series is presented in the succeeding pages.

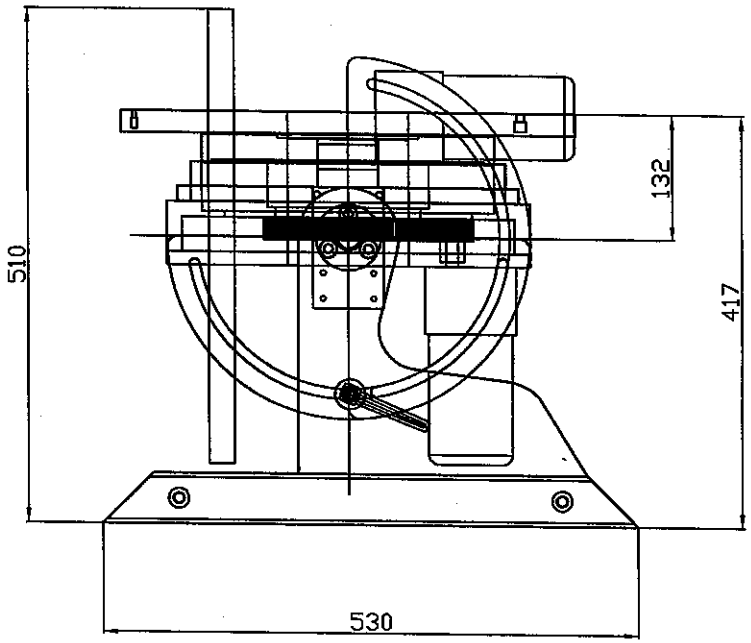

Specification for Positioner

1	Model	LLP-150-H (0370250201)
2	Capacity (Loading)	0.15MT at 100mm
3	Capacity (Tilting)	0.15MT at 100mm
4	Electrical Panel	Yes
5	Rotation Speed	0-4.5rpm at 0-90VDC
6	Tilt Range	+/-90°
7	Incoming Supply	220V-1P-50HZ
8	Control Voltage	24VAC
9	Rotation Drive Control	DC 65W, 90 VDC
10	Control Means	2 Stroke Foot Switch with 3m Cable
11	Tilt	Manual
12	Earthing	450A
13	Color	ESAB Yellow and RAL 9023 Gray
14	Qty	25 units
15	Est Weight	63Kg

Note:
1) CE Compliance
2) Power Supply Cable without Plug.

APPROVAL BY CLIENT
SIGNATURE
WU 01.12.2011 QIONG

Controlled To PROJECT
FRANKIE 01.12.2011 GOH

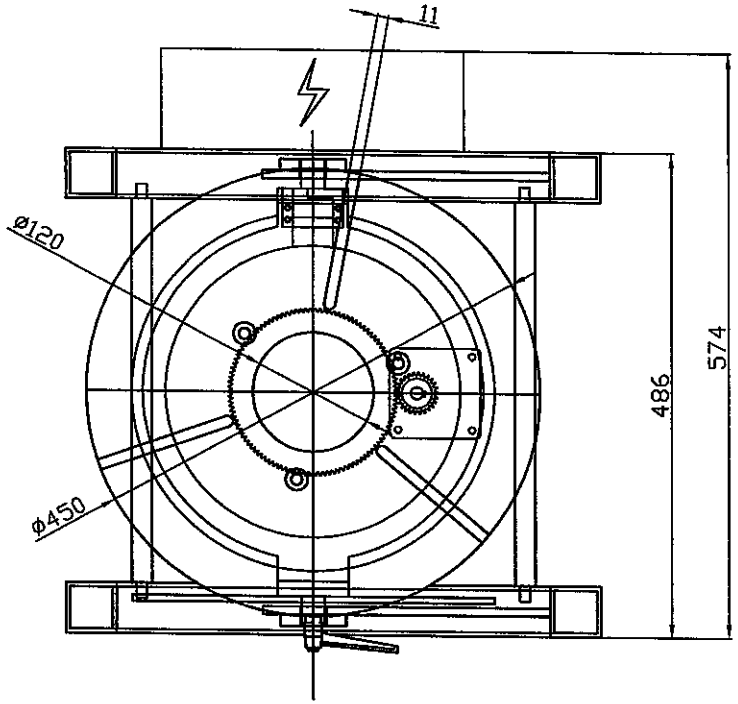

LOAD CHART

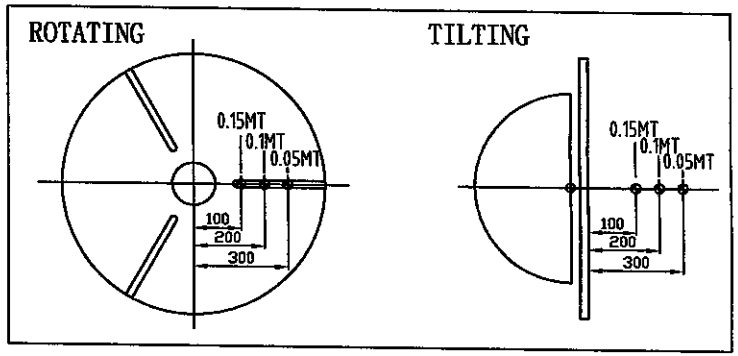

NOTE: ALL DIMENSIONS IN MM, GENERAL TOLERANCE FOLLOW ISO 13920 CLASS C AND ISO 2768-1 CLASS F.

ESAB

	NAME	DATE
DRAWN	Dennis	30.11.2011
APPROVED	TAUFIQ SYAHRUL	01.12.2011

PROJECT/MODEL : LLP-150-H (0370250201)

CLIENT : ESAB Saldatura

DWG. NAME : GENERAL ARRANGEMENT Low Load Positioner 150Kg

DWG. NO. : PJ-5420-GA06

SCALE: N.T.S.
REVISION: 0
SHEET NO: 1 OF 1

THE ORIGINAL AND ALL COPIES OF THIS DRAWING TOGETHER WITH THE COPYRIGHT THEREOF ARE THE SOLE PROPERTY OF R.P.E.I PTE. LTD. SINGAPORE

2.2 Electrical Drawings are compiled in this section to give the user a detailed graphical illustration of the electrical components and circuit diagrams associated with the equipment. For more information regarding the electrical and electronic system of this LLP Positioner Series model, please visit the respective manufacturer's website.

DRAWING LIST

Sales Order No	**5420**	**Item No**	**06**
Customer/Project	**ESAB Saldatura**	**No. of Units**	**25**
Product	**LLPE Positioner**	**Reference No**	**PJ-5420-ED61**
Model	**LLP-150H**	**Revision**	**03 (Revise on 07/12/11)**

Prepared By :	**Approved By :**	**Issued To :**
MITY 2011.12.08	2011.12.08	JaeWoo 2011/12.08

No	Drawing No.	Sht	Rev	Description	Qty/Unit	Remarks
1	LLP-150H-EIC1-220V	1	03	Control Panel Equipment List	N/A	
2	LLP-150H-EI01-220V	1	03	Power Control Circuit Diagram	N/A	
3	LLP-150H-EIP1-220V	1	03	Outside View of Control Panel Diagram	N/A	
4	LLP-150H-EIP2-220V	1	03	Outside View of Control Panel Diagram	N/A	
5	LLP-150H-E1W1-220V	1	03	Cable List	N/A	

Note:

CONTROL PANEL EQUIPMENT LIST

Sales Order No.:	**5420**	**Customer/Project :**	**ESAB Saldatura**
Item No.:	**06**	**Model No :**	**LLP-150H**
No. of Units :	**25**	**Reference No.:**	**LLP-150H-EIC1-220V**
Revison :	**03**		

Prepared By:	**Approved By:**	**Issued To :**
2011.12.08	2011.12.08	JazzWoo 2011/12.08

No.	Symbol No.	Description	Type	Qty/Unit	Brand	Remarks
1	CP1	CONTROL PANEL	H190*W195*D95	1		
2	PL1	PILOT LIGHTS WITH INTEGRAL LED	AD16-16A ACDC24V (white)	1	HONGBO	
3	E.STOP 1	MUSHROOM HEAD PUSH-BUTTONS	XB2-BS542C (Red)	1	TELEMECANIQUE	
4	VR1	POTENTIONMETER	RV24NY 20S B502	1	COSMOS	
5	VR1	POTENTIONMETER KNOB	RW100C	1	COSMOS	
6	SW1	TOGGLE SWITCH	C521A	1	CTND	
7	SW2	TOGGLE SWITCH	C512A	1	CTND	
8	SW3	TOGGLE SWITCH	C513A	1	CTND	
9	PT1	TRANSFORMER	IP: 220V OP:27V/24V/12V/0V (30VA)	1	JUCHE	BK-30
10	SPW	NOISE FILTER	FC2213-6-01	1	QITONG	
11	PCB	DC MOTOR CONTROLLER	XJC220-90D-0 (400W)	1	XAJONG	
12	F1	DOMESTIC CARTRIDGE FUSE	RT14-20 (10 x 38) 4A	1	MRO	
13	F2	DOMESTIC CARTRIDGE FUSE	RT14-20(10 x 38) 2A	1	MRO	
14	F1-F2	MODULAR FUSE CARRIERS	RT18-32(10 x 38) 32A	2	MRO	
15	CR1-CR3	RELAY	MY4N DPCO AC24V	3	OMRON	
16	--	RELAY SOCKET	PYF14A-E	3	OMRON	
17	CR1-CR3	RELAY HOLD-DOWN CLIPS	PYC-A1	6	OMRON	
18	R	METAL RESISTANCE	RX24-50W-10Ω	1		
19	RC	RC ABSORBER	SA-2	1	ITONC	
20	FS1	FOOT SWITCH	EFS-302	1	E-tan	
21	FS1	CABLE GLANDS	PG13.5	1	SHENGYANG	
22	D1	POWER CABLE	3*1.5*3M	1	WANNENG	
23	D1	CABLE GLANDS	PG13.5	1	SHENGYANG	
24	D2	AIR PLUG	WS20*2	1	WEIPU	
25	D2	AIR SOCKET	WS20*2	1	WEIPU	
26	D3	AIR PLUG	WS20*9	1	WEIPU	
27		DC MOTOR	10SGN-9018 65W/DC90V/1800RPM	1	XAJONG	
28		REDUCER	5GN90B	1	XAJONG	

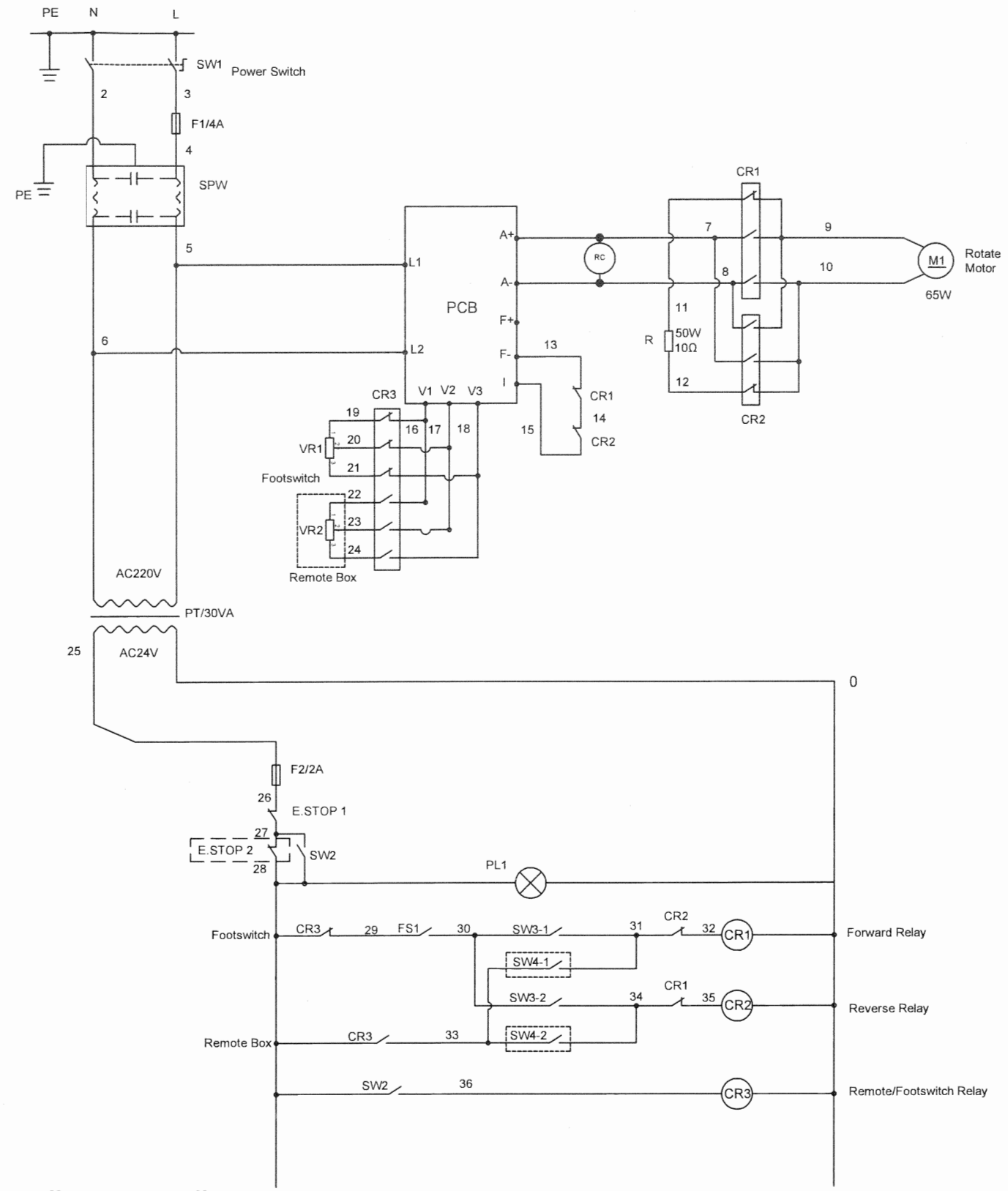

ESAB			PROJECT/MODEL : LLP-150H
DRAWN	NAME: HOU	DATE: 2011/12/07	CLIENT : ESAB Saldatura
APPROVED	2011.12.08		DWG NAME : Power Control Circuit Diagram
			DWG NO. : LLP-150H-EI01-220V
			SCALE: N/A
			REVISION: 03
			SHEET NO: 1 OF 1

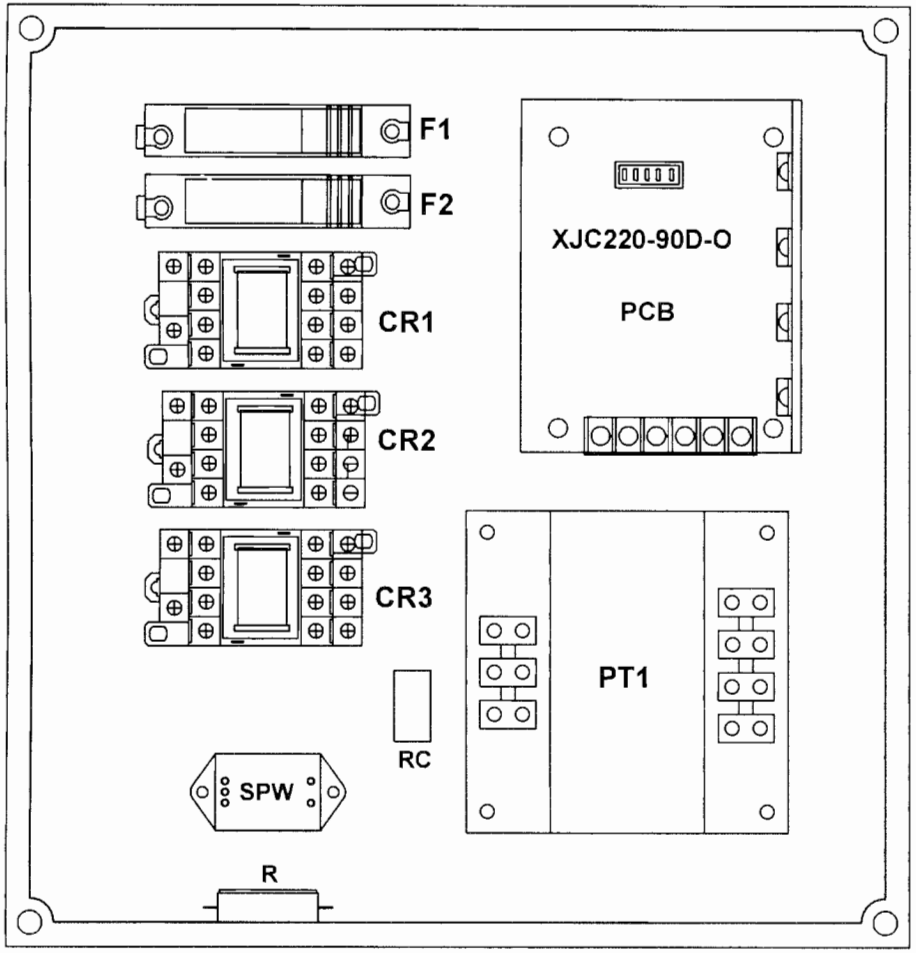

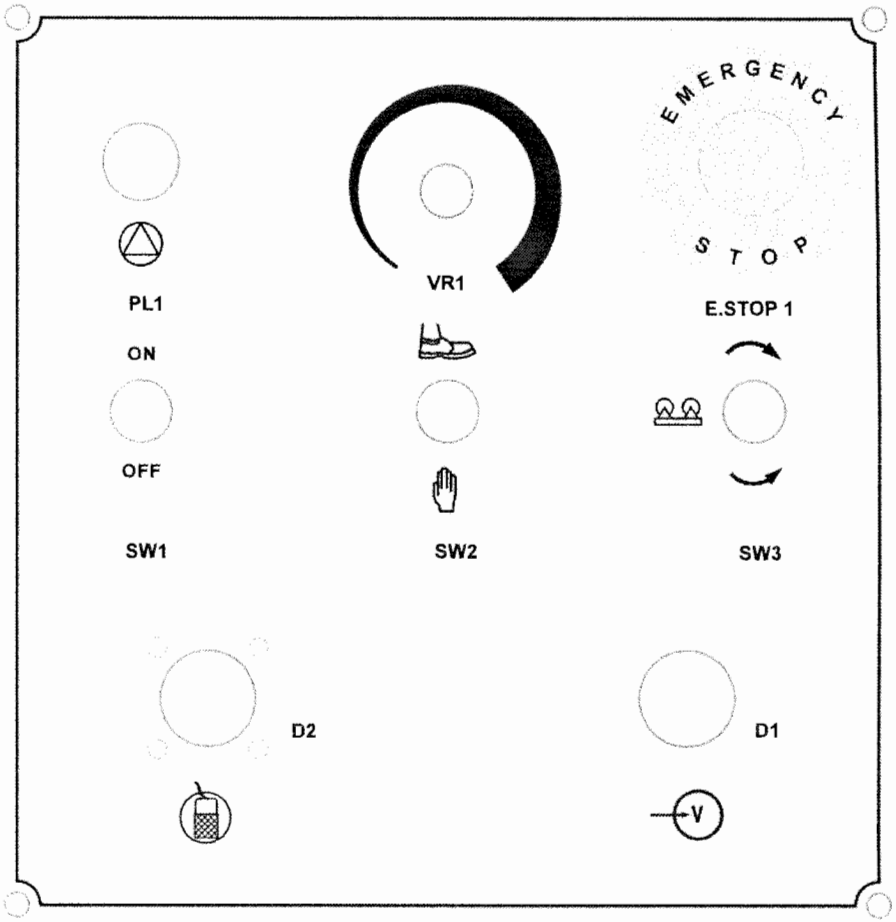

ESAB			PROJECT/MODEL : LLP-150H
	NAME	DATE	CLIENT : ESAB Saldatura
DRAWN	HOU	2011/12/07	
APPROVED		2011.12.08	DWG NAME : Outside View of Control Panel Diagram
			DWG NO. : LLP-150H-EIP1-220V

SCALE: N/A
REVISION: 03
SHEET NO: 1 OF 1

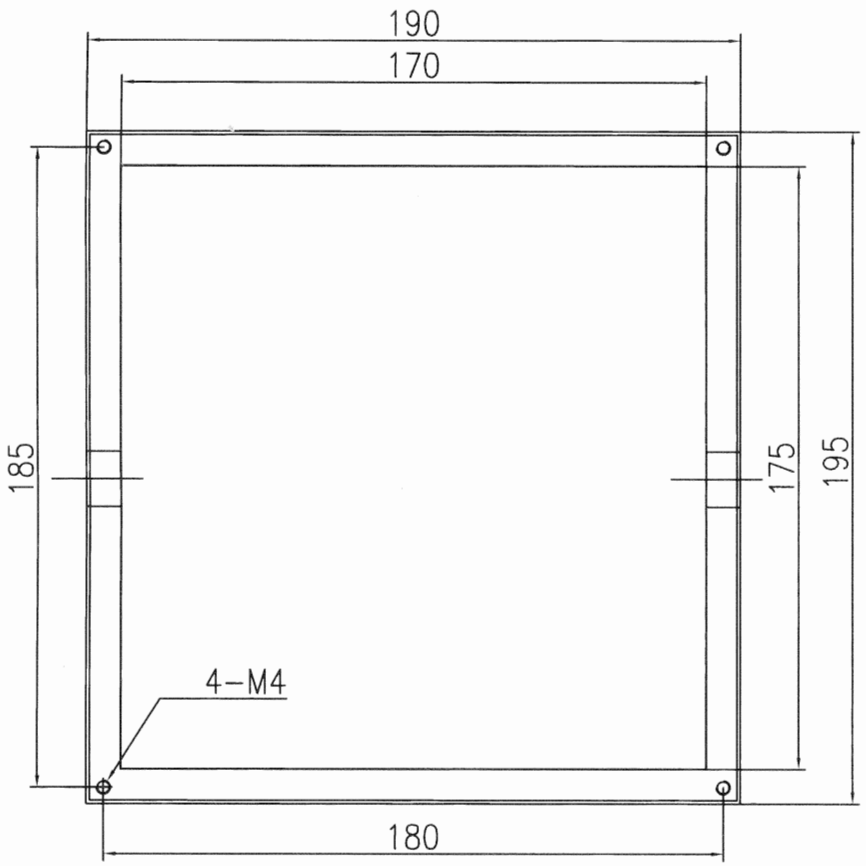

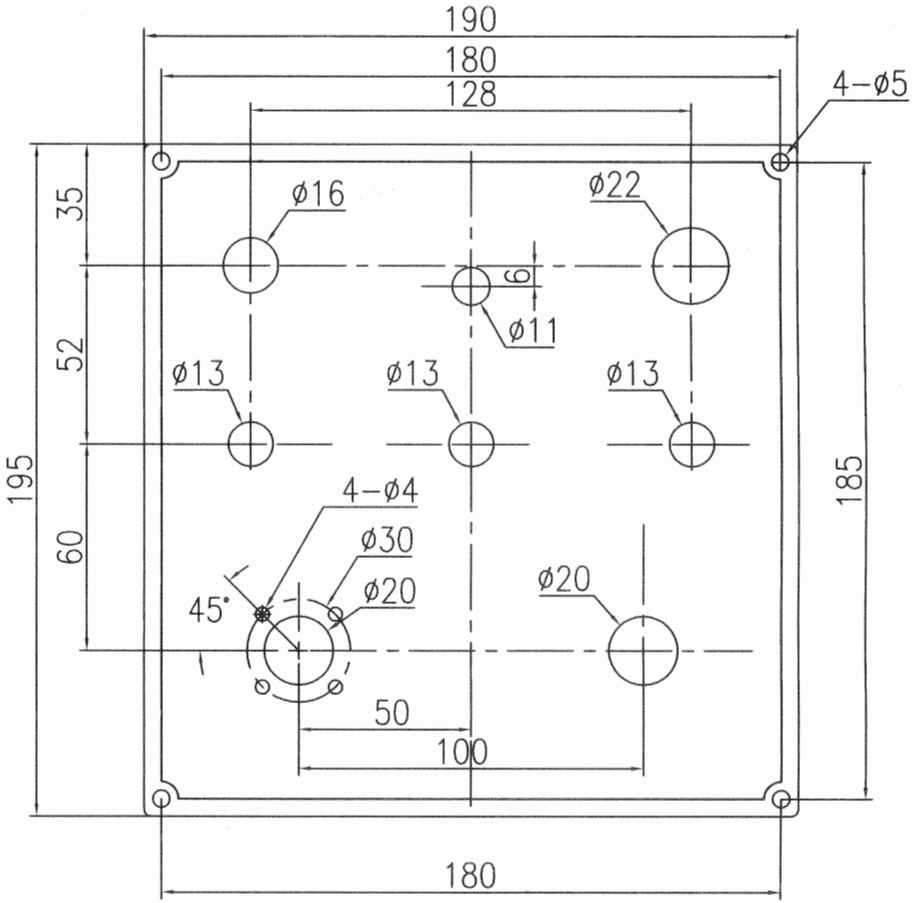

ESAB			PROJECT/MODEL : LLP-150H
	NAME	DATE	CLIENT : ESAB Saldatura
DRAWN	HOU	2011/12/07	
APPROVED		2011.12.08	DWG NAME : Outside View of Control Panel Diagram
			DWG NO. : LLP-150H-EIP2-220V

SCALE: N/A
REVISION: 03
SHEET NO: 1 OF 1

CABLE NO.	CABLE SIZE	ESTIMATE	FROM	TO													
W001	0.75 mm² x 2C		Panel	Motor M1	CABLE CODE	1	2										
					WIRING NO.	9	10										
W002	0.75 mm² x 8C		Panel	Pendent(P1)	CABLE CODE	1	2	3	4	5	6	7	8				
					WIRING NO.	22	23	24	27	28	31	33	34				
					CABLE CODE												
					WIRING NO.												
					CABLE CODE												
					WIRING NO.												
					CABLE CODE												
					WIRING NO.												
					CABLE CODE												
					WIRING NO.												
					CABLE CODE												
					WIRING NO.												
					CABLE CODE												
					WIRING NO.												
					CABLE CODE												
					WIRING NO.												
					CABLE CODE												
					WIRING NO.												
					CABLE CODE												
					WIRING NO.												
					CABLE CODE												
					WIRING NO.												
					CABLE CODE												
					WIRING NO.												
					CABLE CODE												
					WIRING NO.												
					CABLE CODE												
					WIRING NO.												
					CABLE CODE												
					WIRING NO.												
					CABLE CODE												
					WIRING NO.												
					CABLE CODE												
					WIRING NO.												
					CABLE CODE												
					WIRING NO.												
					CABLE CODE												
					WIRING NO.												
					CABLE CODE												
					WIRING NO.												
					CABLE CODE												
					WIRING NO.												
					CABLE CODE												
					WIRING NO.												
					CABLE CODE												
					WIRING NO.												
					CABLE CODE												
					WIRING NO.												

ESAB

	NAME	DATE
DRAWN	HOU	2011/12/07
APPROVED		2011.12.08

PROJECT/MODEL : LLP-150H

CLIENT : ESAB Saldatura

DWG NAME : Cable List

DWG NO. : LLP-150H-EIW1-220V

SCALE: N/A

REVISION: 03

SHEET NO: 1 OF 1

2.3 Parts List Drawings are included in this manual for ease of reference when ordering spare parts. Please indicate the Item Number, Part Number, Description, and Quantity of the spare parts when making any purchase.

The Parts List Drawings for the LLP Positioner Series are found in the succeeding pages.

Recommended Spare Part List for Low Load Range

Model: LLP150H

No.	Gin Number	Discription	Recommended Qty
1	0370251203	PCB XJC220-90D-O	2
2	0370251204	PT1 Transformer IP:220V OP:27/24/12/0V (30VA)	5
3	0370251206	CR1/3 Control Relay MY4NJ DPCO AC24V	5
4	0370251207	F1 Domestic Cartridge Fuse RT14-20 (10x38) 4A	5
5	0370251208	F2 Domestic Cartridge Fuse RT14-20 (10x38) 2A	5
6	0370251209	VR1 Potentionmeter RV24NY 20S B502	5
7	0370250319	Knob RW100C	5
8	0370251214	Motor 10SGN-9018/65W/DC90V/1.2A/1800RPM	1
9	0370251224	Gearbox 5GN/90B	1

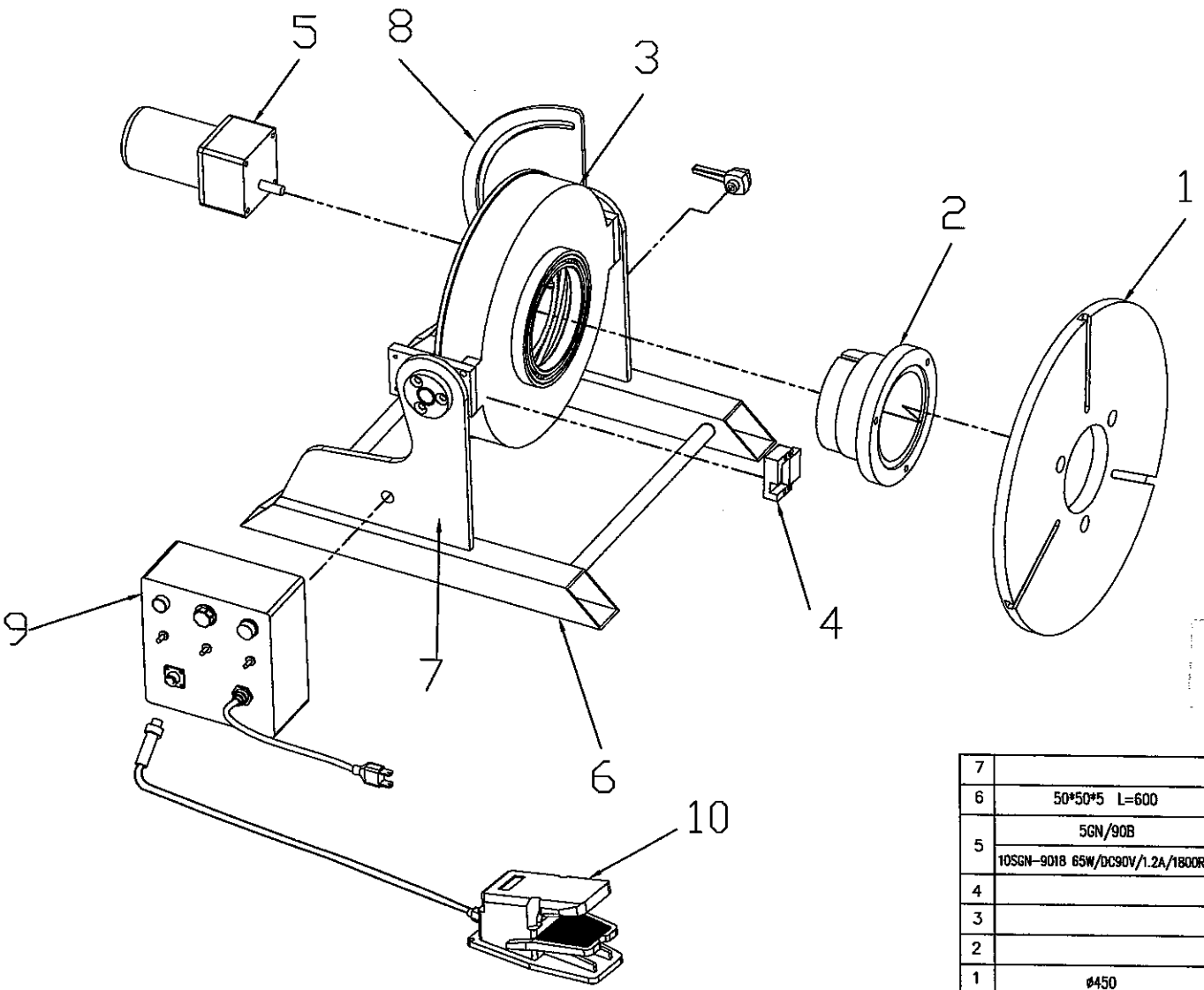

Certified by PROJECT

FRANKIE
05. 12. 2011
GOH

NO.	PART NUMBER	DESCRIPTION	QTY	REMARKS
7		Side Plate	2	
6	50*50*5 L=600	Base	2	
5	5GN/90B	GearBox	1	
	10SGN-901B 65W/DC90V/1.2A/1800RPM	Motor	1	
4		Bushing	1	
3		Rotation Shaft	1	
2		Gear Shaft	1	
1	ø450	Turn Table	1	

NO.	PART NUMBER	DESCRIPTION	QTY	REMARKS
10		Foot Switch	1	
9		Control Box	1	
8		Adjust Angle Plate	1	

ESAB

	NAME	DATE
DRAWN	Tai Keong	01.12.2011
APPROVED	SYAHRUL	5. 12. 2011

MODEL : LLP-150H

Customer : ESAB Saldatura

DWG. NAME : Assembly Drawing

DWG. NO. : PJ-5420-A601

SCALE: NTS

REVISION: 0

SHEET NO: 1 OF 1

THE ORIGINAL AND ALL COPIES OF THIS DRAWING TOGETHER WITH THE COPYRIGHT THEREOF ARE THE SOLE PROPERTY OF R.P.E.I PTE. LTD. SINGAPORE

ESAB Subsidiaries and Representative Offices

Europe

AUSTRIA
ESAB Ges.m.b.H
Vienna-Liesing
Tel: +43 1 888 25 11
Fax: +43 1 888 25 11 85

BELGIUM
S.A. ESAB N.V.
Brussels
Tel: +32 2 745 11 00
Fax: +32 2 745 11 28

THE CZECH REPUBLIC
ESAB VAMBERK s.r.o.
Vamberk
Tel: +420 2 819 40 885
Fax: +420 2 819 40 120

DENMARK
Aktieselskabet ESAB
Herlev
Tel: +45 36 30 01 11
Fax: +45 36 30 40 03

FINLAND
ESAB Oy
Helsinki
Tel: +358 9 547 761
Fax: +358 9 547 77 71

FRANCE
ESAB France S.A.
Cergy Pontoise
Tel: +33 1 30 75 55 00
Fax: +33 1 30 75 55 24

GERMANY
ESAB GmBH
Solingen
Tel: +49 212 298 0
Fax: +49 212 298 218

GREAT BRITAIN
ESAB Group (UK) Ltd
Waltham Cross
Tel: +44 1992 76 85 15
Fax: +44 1992 71 58 03

ESAB Automation Ltd
Andover
Tel: +44 1264 33 22 33
Fax: +44 1264 33 20 74

HUNGARY
ESAB Kft
Budapest
Tel: +36 1 20 44 182
Fax: +36 1 20 44 186

ITALY
ESAB Saldatura S.p.A.
Mesero (Mi)
Tel: +39 02 97 96 81
Fax: +39 02 97 28 91 81

THE NETHERLANDS
ESAB Nederland B.V.
Utrecht
Tel: +31 30 2485 377
Fax: +31 30 2485 260

NORWAY
AS ESAB
Larvik
Tel: +47 33 12 10 00
Fax: +47 33 11 52 03

POLAND
ESAB Sp.zo.o
Katowice
Tel: +48 32 351 11 00
Fax: +48 32 351 11 20

PORTUGAL
ESAB Lda
Lisbon
Tel: +351 8 310 960
Fax: +351 1 859 1277

SLOVAKIA
ESAB Slovakia s.r.o
Bratislava
Tel: +421 7 44 88 24 26
Fax: +421 7 44 88 87 41

SPAIN
ESAB Ibérica S.A.
Alcalá de Henares (MADRID)
Tel: +34 91 878 3600
Fax: +34 91 802 3461

SWEDEN
ESAB Sverige AB
Gothenburg
Tel: +46 31 50 95 00
Fax: +46 31 50 92 22

ESAB International AB
Gothenburg
Tel: +46 31 50 90 00
Fax: +46 31 50 93 60

SWITZERLAND
ESAB AG
Dietikon
Tel: +41 1 741 25 25
Fax: +41 1 740 30 55

North and South America

ARGENTINA
CONARCO
Buenos Aires
Tel: +54 11 4 753 4039
Fax: +54 11 4 753 6313

BRAZIL
ESAB S.A.
Contagem-MG
Tel: +55 31 2191 4333
Fax: +55 31 2191 4440

CANADA
ESAB Group Canada Inc.
Missisauga, Ontario
Tel: +1 905 670 02 20
Fax: +1 905 670 48 79

MEXICO
ESAB Mexico S.A.
Monterrey
Tel: +52 8 350 5959
Fax: +52 8 350 7554

USA
ESAB Welding & Cutting Products
Florence, SC
Tel: +1 843 669 44 11
Fax: +1 843 664 57 48

Asia/Pacific

CHINA
Shanghai ESAB A/P
Shanghai
Tel: +86 21 5308 9922
Fax: +86 21 6566 6622

INDIA
ESAB India Ltd
Calcutta
Tel: +91 33 478 45 17
Fax: +91 33 468 18 80

INDONESIA
P.T. ESABindo Pratama
Jakarta
Tel: +62 21 460 0188
Fax: +62 21 461 2929

JAPAN
ESAB Japan
Tokyo
Tel: +81 3 5296 7371
Fax: +81 3 5296 8080

MALAYSIA
ESAB (Malaysia) Sdn Bhd
Selangor
Tel: +60 3 8027 9869
Fax: +60 3 8027 4754

SINGAPORE
ESAB Asia/Pacific Pte Ltd
Singapore
Tel: +65 6861 43 22
Fax: +65 6861 31 95

SOUTH KOREA
ESAB SeAH Corporation
Kyungnam
Tel: +82 55 269 8170
Fax: +82 55 289 8864

UNITED ARAB EMIRATES
ESAB Middle East FZE
Dubai
Tel: +971 4 887 21 11
Fax: +971 4 887 22 63

AUSTRALIA
ESAB Australia Pty Ltd
Victoria
Tel: +61 1300 372 228

THAILAND
Siam ESAB Welding & Cutting Ltd
Sriracha
Tel: +66 38 400550
Fax: +66 38 400549

Africa

SOUTH AFRICA
ESAB Africa Welding & Cutting Pty Ltd
Edenvale
Tel: +27 11 608 8200

Representative Offices

BULGARIA
ESAB Representative Office
Sofia
Tel/Fax: +359 2 974 42 88

EGYPT
ESAB Egypt
Dokki-Cairo
Tel: +20 2 390 96 69
Fax: +20 2 393 32 13

ROMANIA
ESAB Representative Office
Bucharest
Tel/Fax: +40 1 322 36 74

RUSSIA
LLC ESAB
Moscow
Tel: +7 095 543 9281
Fax: +7 095 543 9280

LLC ESAB
St Petersburg
Tel: +7 812 336 7080
Fax: +7 812 336 7060

Distributors

For addresses and phone numbers to our distributors in other countries, please visit our home page

www.esabasia.com

Romar Handling and Positioning Equipment (RPEI)
Commercial Office
38 Joo Koon Circle, Jurong
Singapore 629063
Phone: +65 68614322
Fax: +65 68613363

www.esabasia.com